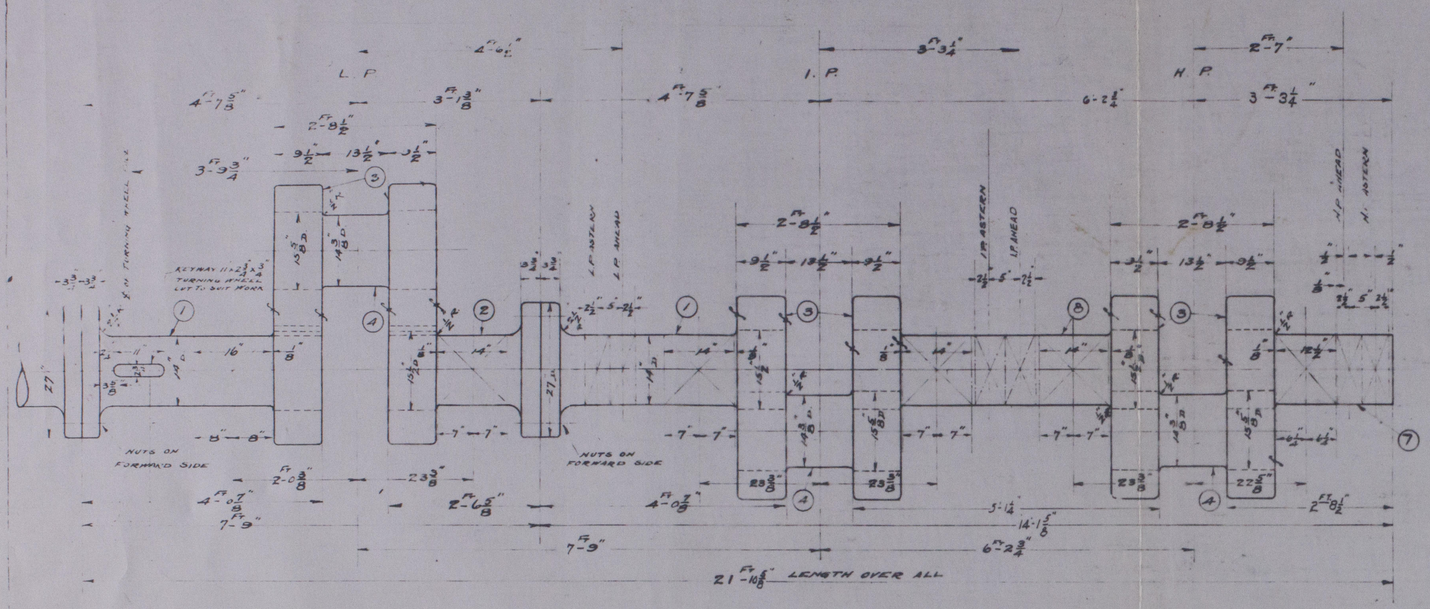

SLABS ROUGH MACHINED AND PAINTED IF FORGINGS.
SHAFTS AND PINS FINISHED ALL OVER.
BEARINGS POLISHED.
FINISHING CUT TO BE TAKEN OVER SHAFT AFTER ASSEMBLING.
CAST STEEL CRANK WEBS WILL BE ROUGH MACHINED ON SIDES & PAINTED.

ALTERATIONS				
DATE	NOTED	APPD	ALTERATIONS	
[illegible]	[illegible]		COUPLING [illegible] BETWEEN H.P. & I.P.	

BILL OF MATERIAL				
QUANTITIES FOR ONE COMPLETE ENGINE.				
NO. REQ.	MARK	NAME	MATERIAL	REMARKS
2	1	CRANK SHAFT	STEEL	O.H. TESTED
1	2	CRANK SHAFT	STEEL	O.H. TESTED
6	3	WEBS	STEEL	O.H. BREAST
3	4	PINS	STEEL	O.H. TESTED
18	5	COUPLING BOLTS	STEEL	O.H. 6 SPARE
18		NUTS	W.I.	
1	7	CRANK SHAFT	STEEL	O.H. TESTED
1	8	CRANK SHAFT	"	"

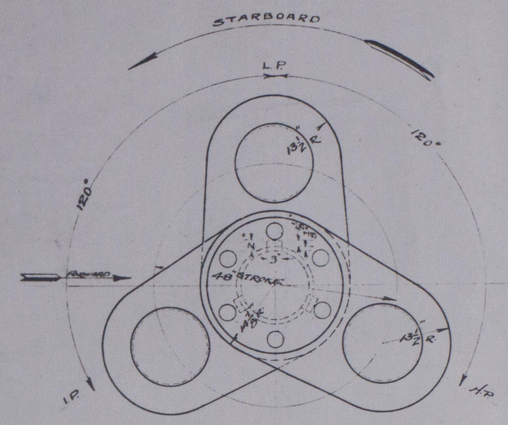

LOCKING AFT
RIGHT HAND ENGINE.

NOTE:—
ALL FORGINGS & CASTINGS WILL BE MADE TO SUIT RULES AMERICAN BUREAU OF SHIPPING.

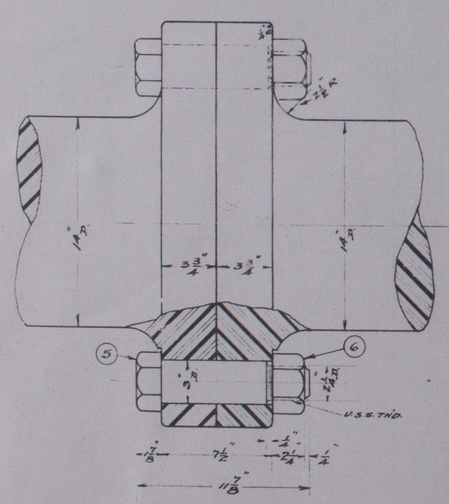

FINISH ALL OVER

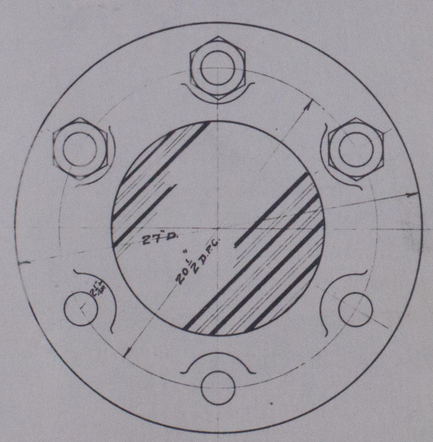

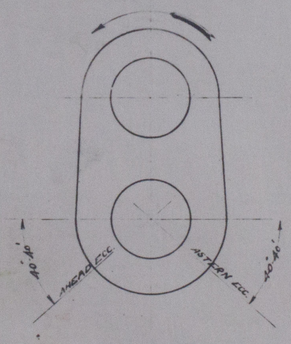

L.P. CRANK
OUTSIDE STEAM

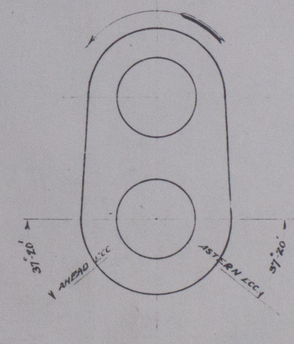

I.P. CRANK
OUTSIDE STEAM

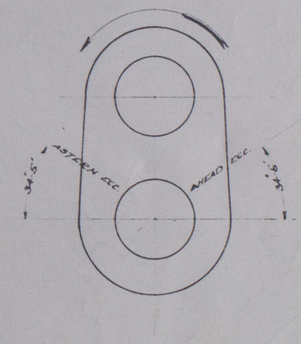

H.P. CRANK
INSIDE STEAM

CLASSIFICATION TESTS WILL BE MADE TO SUIT SOCIETY LISTED ABOVE.

FORGINGS TO MEET TESTS OF LLOYD'S REGISTER OF SHIPPING.
TENSILE STRENGTH.
28 TONS TO 32 TONS
ELONGATION
24% FOR 28 TONS, 25% FOR 32 TONS.
SEE RULES OF ABOVE BUREAU.

STEEL CASTINGS TO MEET TESTS OF LLOYD'S REGISTER OF SHIPPING
TENSILE STRENGTH
26 TONS TO 35 TONS
ELONGATION
NOT LESS THAN 20%
SEE RULES OF ABOVE BUREAU.

FORGINGS TO MEET TESTS OF AMERICAN BUREAU OF SHIPPING
TENSILE STRENGTH
60,000 TO 78,400 LBS
ELONGATION.
30% FOR 60,000 22% FOR 78,400
SEE RULES OF ABOVE BUREAU.

STEEL CASTINGS TO MEET TESTS OF AMERICAN BUREAU OF SHIPPING.
TENSILE STRENGTH
58,000 TO 78,400 LBS.
ELONGATION
20% AT 58,000. 15% AT 78,400
SEE RULES OF ABOVE BUREAU.

J. A. Young.
IN CASE OF ERROR OR MISUNDERSTANDING NOTIFY THIS OFFICE IMMEDIATELY

UNITED STATES SHIPPING BOARD
EMERGENCY FLEET CORPORATION
TECHNICAL DEPARTMENT,
WASHINGTON, D. C.

STD. ENGINE 24 1/2" x 46 1/2" x 72" x 48"
CRANK SHAFT

SCALE 1" = 3" = 1 FT. DATE JAN 20 18
DRAWN BY [illegible] CHECKED BY [illegible]
TRACED BY [illegible] APPROVED [illegible]
Drawing No. E-2500-40

"Guatemala" ex "VALIENTE"

Nyk 40295

W42-0022
Lloyd's Register Foundation